CONDOR DC Power Supplies

Commercial/Medical International + Linears

SL POWER ELECTRONICS

International + Linears

Summary:

- World-wide ac input ranges and safety standards
- Industry standard packages
- Commercial UL/CSA TUV/IEC approved—models to UL/CSA 60950; EN/IEC60950-1
- Burn-in with cycling; 3-year warranty
- Capacitors have highest CV & ripple current ratings
- Medical Approved to UL2601-1/60601-1, IEC60601-1 and CSA601.1
- Medical leakage 10 µA
- MTBF 200,000+ hours per MIL-HDBK-217D (most units)
- All electrolytic caps rated at 105°C
- Transformer insulation meets Class F (155°C)
- Exceed FCC and CISPR22, Class B conducted emissions
- RoHS Compliant models available (G suffix)
- CE marked to LVD

SPECIFICATIONS

Ac Input 100, 120 and 240 Vac: +10%, -13%; 215 Vac: +12%, -11%; 47 to 63Hz. Tolerance for 230 Vac operation is +15%, -10%. Derate output current 10% for 50 Hz operation.	Remote Sensing Provided on all models; open sense lead protection built-in (except HA & HTAA series).
Dc Output See voltage rating chart. Adjustment range ±5% minimum except HA series.	Stability ±0.05% for 24 hours after warmup.
Line Regulation ±0.05% for a 10% change.	Temperature Rating 0 to 50°C full rated, derated linearly to 40% at 70°C.
Load Regulation ± 0.05% for a 50% load change.	Temperature Coefficient ±0.01%/°C maximum.
Output Ripple 3 mV +0.05% of output voltage, peak to peak maximum. All "3-terminal regulator" outputs: 3 mV +0.2% peak to peak maximum.	Efficiency 5 V units: 45%; 12 and 15 V units: 55%; 20 and 24 V units: 60%.
Transient Response <50 microseconds for 50% load change.	Logic Inhibit and Current-Share F & G models.
Short Circuit Protection Automatic current limit/foldback.	Medical Stock and Vibration Per Mil-Std-810D, Method 514.3, Category 1, Procedure 1. Per Mil-Std-810D, Method 516.3, Procedure III.
Overvoltage Protection Built-in on all 5 V models, set at 6.2 V ±0.4 V. Other models use optional overvoltage protection.	Storage -40 to +85 °C.

All specifications are typical at nominal input, full load at 25°C unless otherwise stated

Commercial Model (Single)	Medical Model	Voltage	Current	Case
HB2-3-A+G		2 V	3 A	B
HC2-6-A+G		2 V	6 A	C
HE2-18-A+G		2 V	18 A	E
	ML5-1-OV-A	5 V	1.0 A	L
HA5-1.5-OV-A+G		5 V	1.5 A	B
HB5-3-OV-A+G		5 V	3 A	B
HC5-6-OV-A+G		5 V	6 A	C
HN5-9-OV-A+G		5 V	9 A	N
HD5-12-OV-A+G		5 V	12 A	D
HE5-18-OV-A+G		5 V	18 A	E
F5-25-OV-A+*G		5 V	25 A	F
G5-35-OV-A+ * (1)		5 V	35 A	G
CP197-A+G		5 V	50 A	G
	ML12-0.5-A	12 V	0.5 A	L
HA15-0.9-A+ (12 V)G		12 V	0.9 A	B
HB12-1-7-A+G	MB12-1-7-A	12 V	1.7 A	B
HC12-3.4-A+G	MC12-3.4-A	12 V	3.4 A	C
HN12-5.1-A+G		12 V	5.1 A	N
HD12-6.8-A+G	MD12-6.8-A	12 V	6.8 A	D
HE12-10-2-A+G		12 V	10.2 A	E
	ML15-0.4-A	15 V	.4 A	L
HA15-0.9-A+G		15 V	0.9 A	B
HB15-1.5-A+G	MB15-1.5-A	15 V	1.5 A	B
HC15-3-A+G	MC15-3-A	15 V	3 A	C
HN15-4.5-A+G		15 V	4.5 A	N
HD15-6-A+G	MD15-6-A	15 V	6 A	D
HE15-9-A+G *		15 V	9 A	E
F15-15-A+G *		15 V	15 A	F
HA24-0.5-A+G		24 V	0.5 A	B
HB24-1.2-A+G	MB24-1.2-A	24 V	1.2 A	B
HC24-2.4-A+G	MC24-2.4-A	24 V	2.4 A	C
HN24-3.6-A+G		24 V	3.6 A	N
HD24-4.8-A+G	MD24-4.8-A	24 V	4.8 A	D
HE24-7.2-A+G *		24 V	7.2 A	E
F24-12-A+G *		24 V	12 A	F
HA24-0.5-A+ (28 V)G		28 V	0.5 A	B
HB28-1-A+G	MB28-1-A	28 V	1 A	B
HC28-2-A+G	MC28-2-A	28 V	2 A	C
HN28-3-A+G		28 V	3 A	N
HD28-4-A+G	MD28-4-A	28 V	4 A	D
HE28-6-A+G *		28 V	6 A	E
F24-12-A+(28 V)G *		28 V	10 A	F
HB48-0.5-A+G		48 V	0.5 A	B
HC48-1-A+G		48 V	1 A	C
HD48-3-A+G **		48 V	3 A	D
HE48-4-A+G		48 V	4 A	E
F48-6-A+G *		48 V	6 A	F

Notes:
1. All single output models have isolated outputs.
2. Model G5-50-OV-A+ not RoHS compliant

Commercial Model (Dual)	Medical Model	Output 1	Output 2	Case
HAA5-1.5-OV-A+G		5 V @ 1.5 A	5 V @ 1.5 A	AA
HBB5-3-OV-A+G		5 V @ 3 A	5 V @ 3 A	BB
HCC5-6-OV-A+G		5 V @ 6 A	5 V @ 6 A	CC
HAA512-A+G	MAA512-A	5 V @ 2 A	9 to 15 V (adj) @ 0.5 A	AA
HBB512-A+G	MBB512-A	5 V @ 3 A	9 to 15 V (adj) @ 1.2 A	BB
HCC512-A+G **	MCC512-A	5 V @ 6 A	9 to 15 V (adj) @ 2.5 A	CC
HAA524-A+G **	MAA524-A	5 V @ 2 A	18 to 24 V (adj) @ 0.3 A	AA
HBB524-A+G	MBB524-A	5 V @ 3 A	18 to 24 V (adj) @ 0.8 A	BB
HCC524-A+G	MCC524-A	5 V @ 6 A	18 to 24 V (adj) @ 2 A	CC
HAD12-0.4-A+G		+12 V @ 0.4 A	-12 V @ 0.4 A	B
	MLL12-0.25-A	+12 V @ 0.25 A	-12 V @ 0.25 A	L
	MLL15-0.2-A	+15 V @ 0.2 A	-15 V @ 0.2 A	L
HAD15-0.4-A+G		+15 V @ 0.4 A	-15 V @ 0.4 A	B
HAA15-0.8-A+G	MAA15-0.8-A	+15 V @ 0.8 A	-15 V @ 0.8 A ***	AA
HBB15-1.5-A+G	MBB15-1.5-A	+15 V @ 1.5 A	-15 V @ 1.5 A ***	BB
HCC15-3-A+G	MCC15-3-A	+15 V @ 3 A	-15 V @ 3 A ***	CC
HDD15-5-A+G		+15 V @ 5 A	-15 V @ 5 A ***	E
HAA24-0.6-A+G		+18 to 24 V @ 0.4/0.6 A	-18 to 24 V @ 0.4/0.6 A	AA
CP323-A+G		+5 V @ 2 A	+12 V @ 4 A	BB

** May require fan cooling
*** No. 2 output usable at -5 V, rate at 1/2 of 15 V current rating.

Commercial Model (Triple)	Medical Model	Output 1	Output 2	Output 3	Case
	MTLL-5W-A	5 V @ 0.5 A	+12 to 15 V @ 0.1 A	-12 to 15 V @ 0.1 A***	L
HTAA-16W-A+G	MTAA-16W-A	5 V @ 2 A	+12 to 15 V @ 0.4/0.4 A	-12 to 15 V @ 0.4/0.4 A***	AA
HBAA40W-A+G	MBAA40W-A	5 V @ 3 A	+12 to 15 V @ 1/0.8 A	-12 to 15 V @ 1/0.8 A***	BAA
HCBB105W-A+G **		5 V @ 3 A	+12 to 15 V @ 3.4/3.0 A	-12 to 15 V @ 3.4/3.0 A***	CBB
HCAA60W-A+G	MCAA60W-A	5 V @ 6 A	+12 to 15 V @ 1/0.8 A	-12 to 15 V @ 1/0.8 A***	D
HCBB75W-A+G	MCBB75W-A	5 V @ 6 A	+12 to 15 V @ 1.7/1.5 A	-12 to 15 V @ 1.7/1.5 A***	CBB
CP131-A+G		5 V @ 8 A	+12 to 15 V @ 1.7/1.5 A	-12 to 15 V @ 1.7/1.5 A***	NBB
HDBB105W-A+G *		5 V @ 12 A	+12 to 15 V @ 1.7/1.5 A	-12 to 15 V @ 1.7/1.5 A***	DBB
HDCC150W-A+G *		5 V @ 12 A	+12 to 15 V @ 3.4/3 A	-12 to 15 V @ 3.4/3 A***	DCC

*Requires fan cooling
** May require fan cooling
***No. 3 output usable at -5 V, rate at 1/2 of 15 V current rating.
Outputs rated at 9 to 15V, 12 to 15V, or 18 to 24V are user adjustable outputs.
All outputs without + or - sign are isolated outputs and may be referenced as either a positive or negative output.

FIXED DISK SERIES

Both models without UL, CSA or TUV

Commercial Model (Dual)	Output 1	Output 2	Output 3	Case
CP379-A+G	+5 V @ 6 A	+ 24 V @ 3.5/6 A PK	-5 or -12 @ 1.2 A	NBB
CP498-A+G	+5 V @ 6 A	+ 12 V @ 5/10 A PK	-12 V @ 0.5 A	NBB

SL Power Electronics, Inc. 6050 King Drive, Bldg A, Ventura, CA, 93003, USA. Phone: (805) 486 4565 Fax: (805) 487 8911 Email: info@slpower.com. www.slpower.com Rev. 12/19/08. Data Sheet © 2008 SL Power Electronics, Inc. The information and specifications contained in this data sheet are believed to be correct at time of publication. However, SL Power accepts no responsibility for consequences arising from reproduction errors or inaccuracies. Specifications are subject to change without notice.

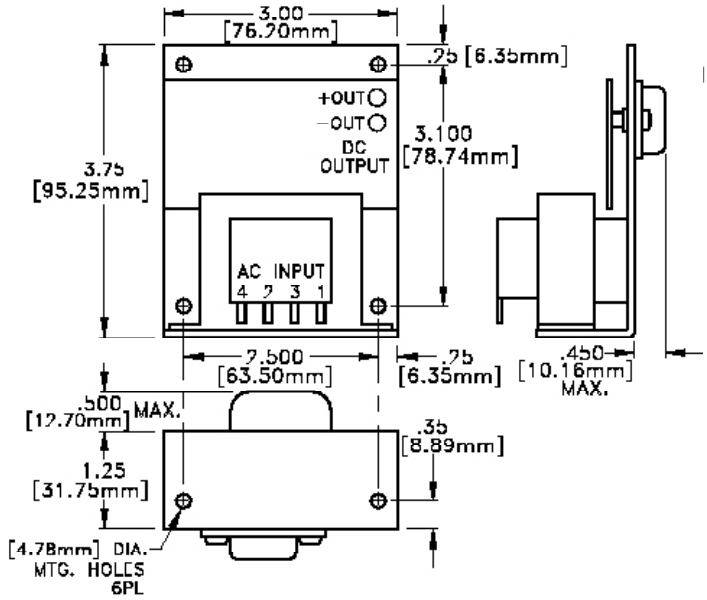

A CASE (WT. 1 LB.)

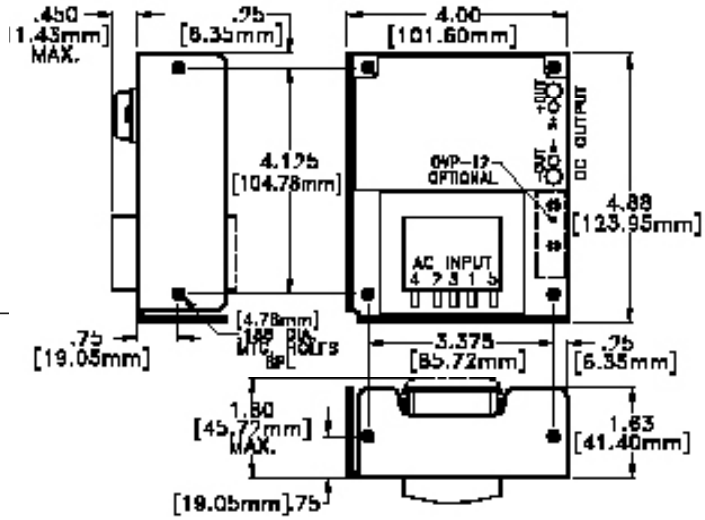

B CASE (WT. 2 LB.)

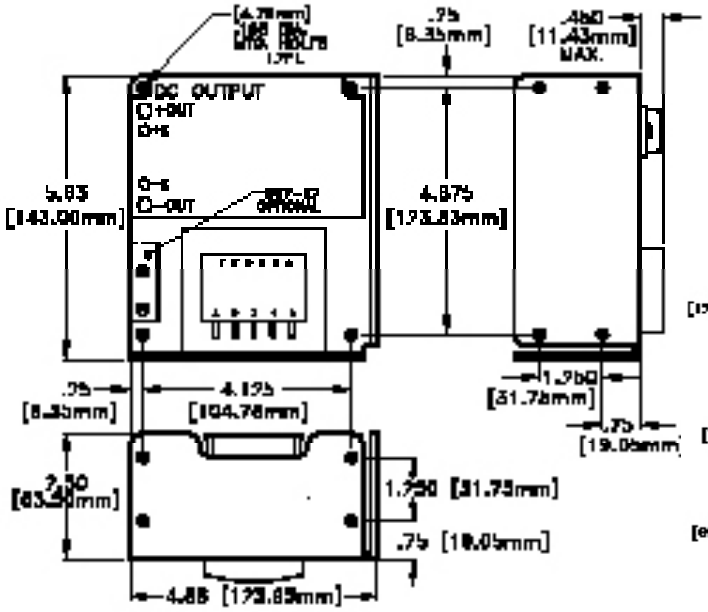

C CASE (WT. 4 LB.)

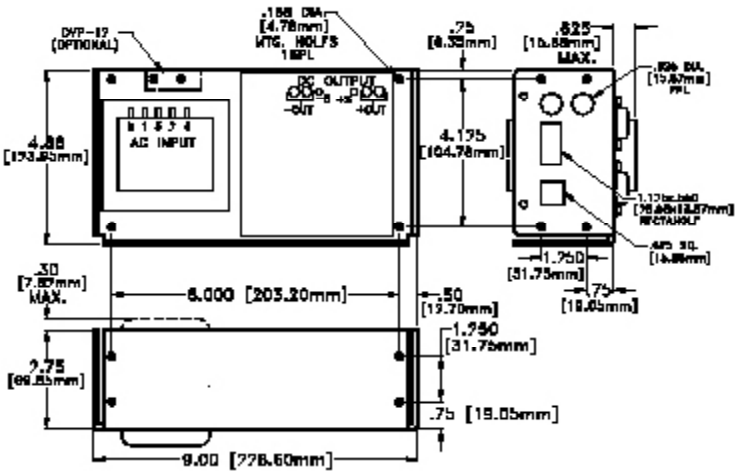

D CASE (WT. 7.5 LB.)

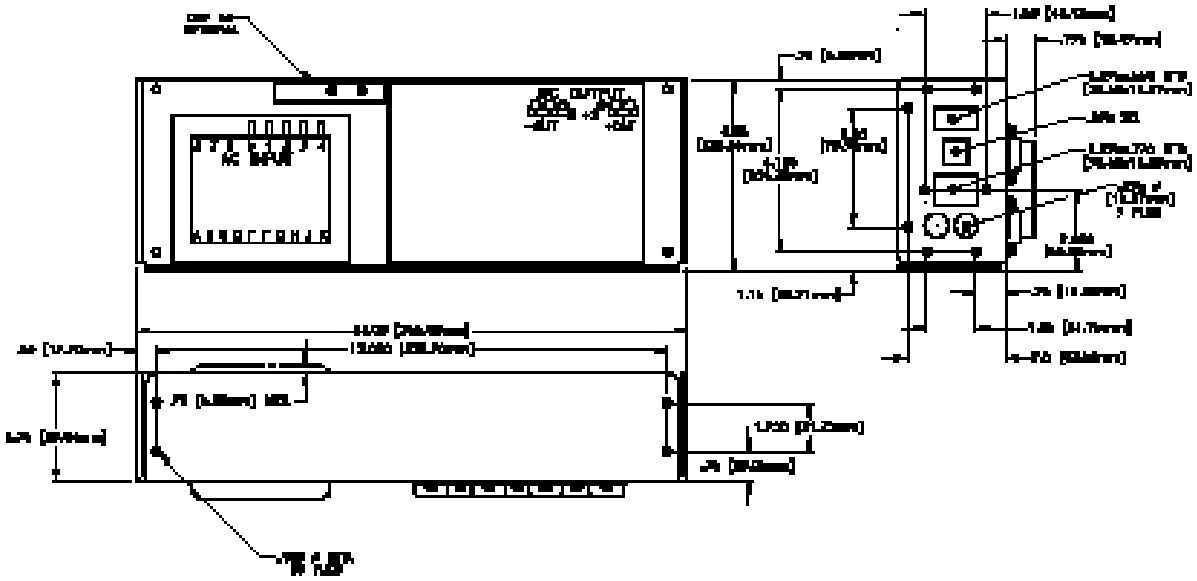

E CASE (WT. 10 LB.)

F CASE
(WT. F5: 14 LB.; F15, 24: 18 LB.)

G CASE (WT. G5: 19 LB.)

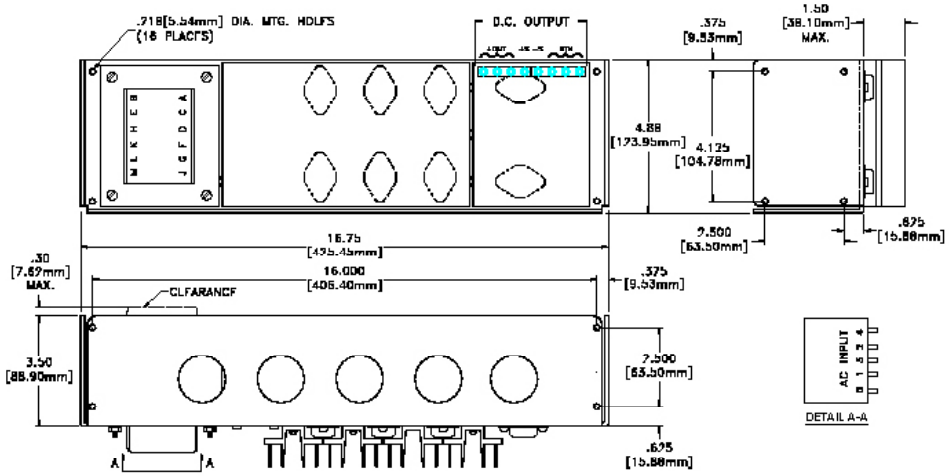

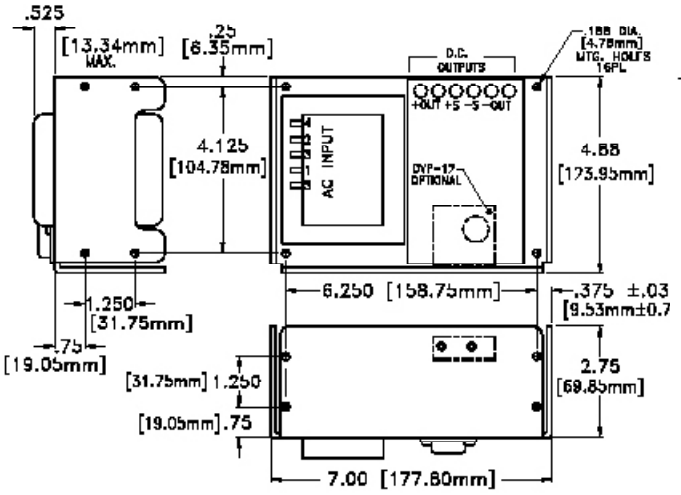

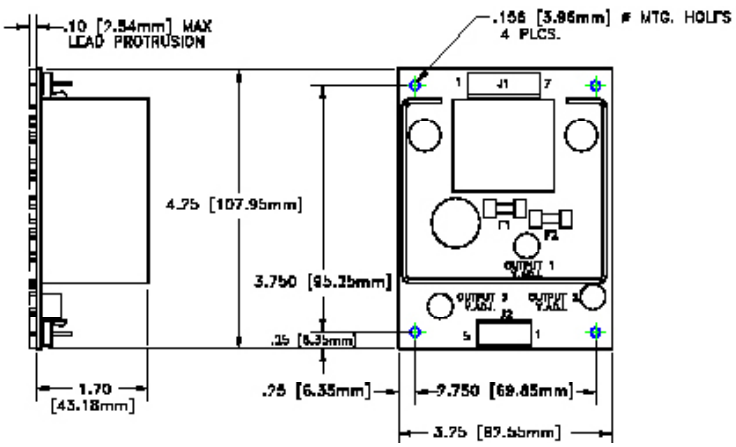

N CASE (WT. 7 LB.)

L CASE (WT. 1 LB.)

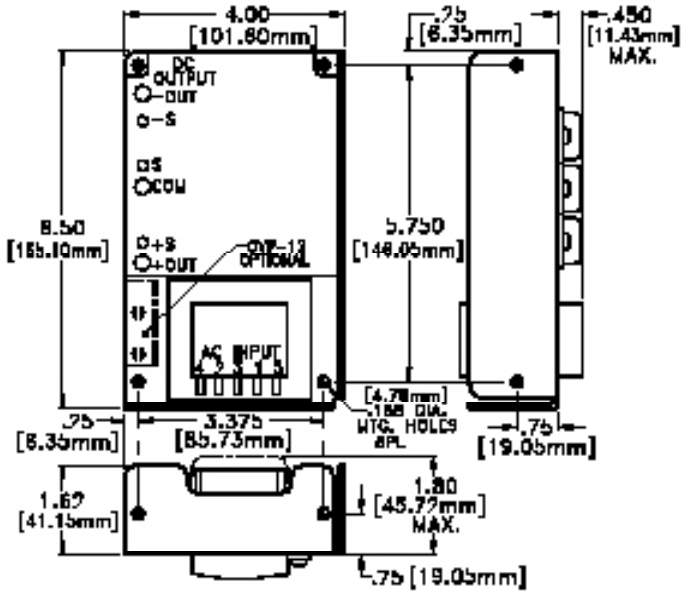

AA CASE (WT. 2 LB.)

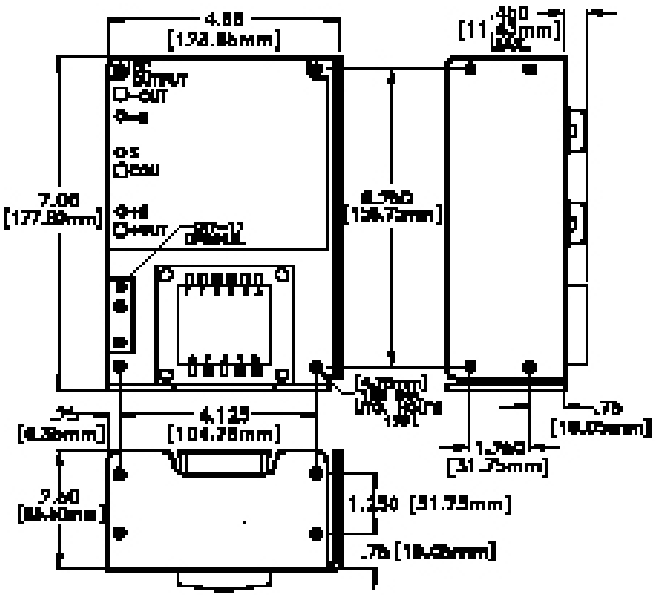

BB CASE (WT. 4 LB.)

CC CASE (WT. 7 LB.)

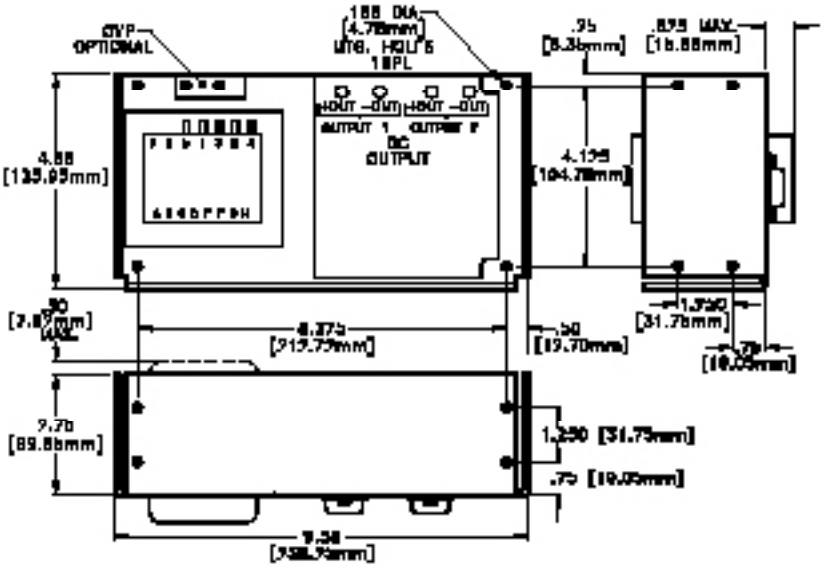

BAA CASE (WT. 5 LB.)

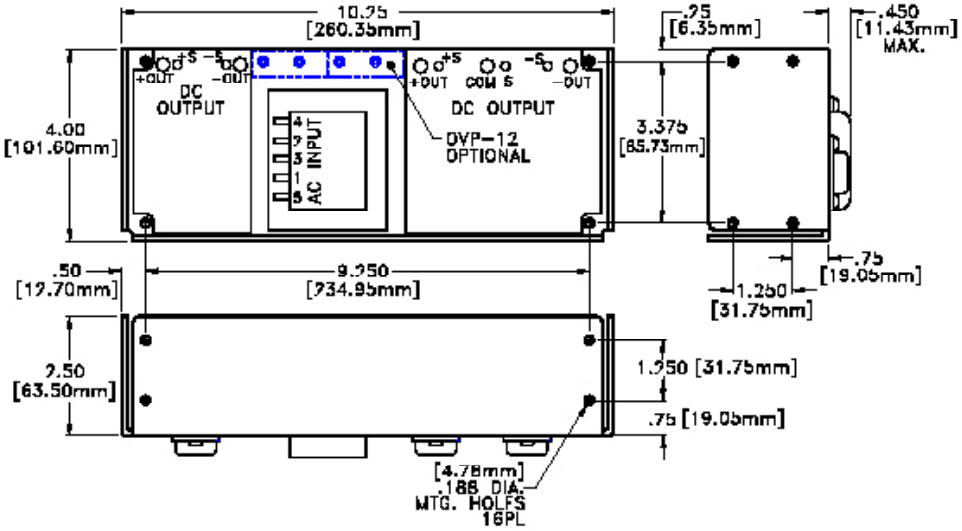

CBB CASE (WT. 8 LB.)

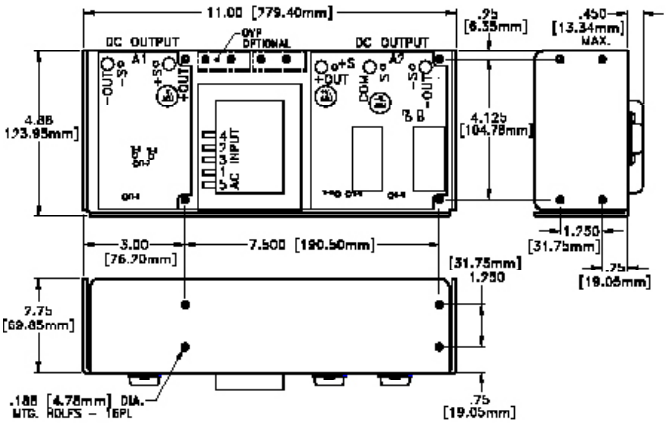

DBB CASE (WT. 11 LB.)

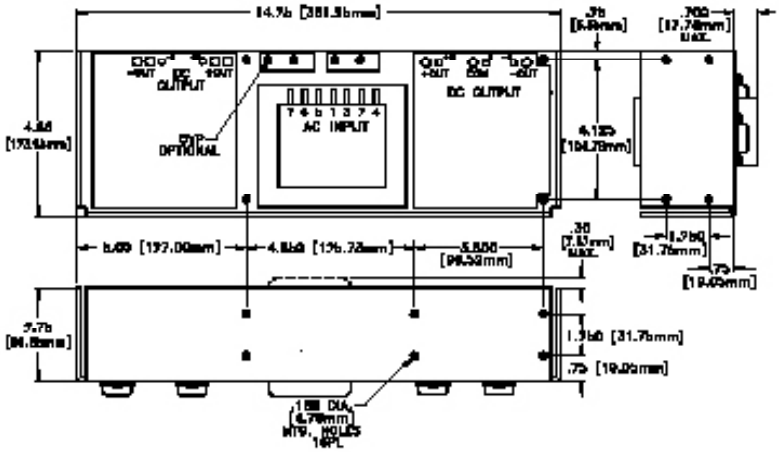

DCC CASE (WT. 12 LB.)

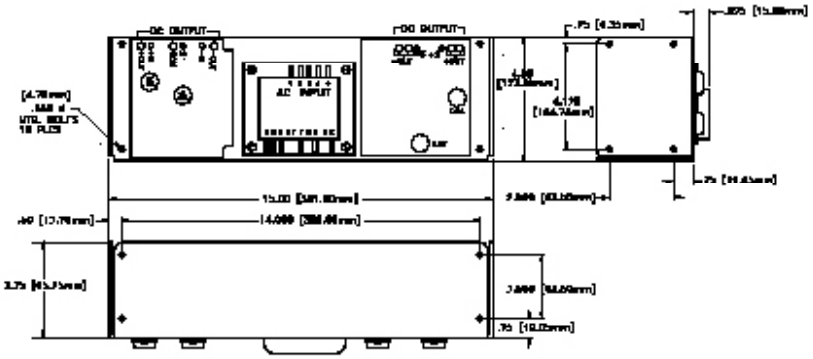

NBB CASE (WT. 12 LB.)

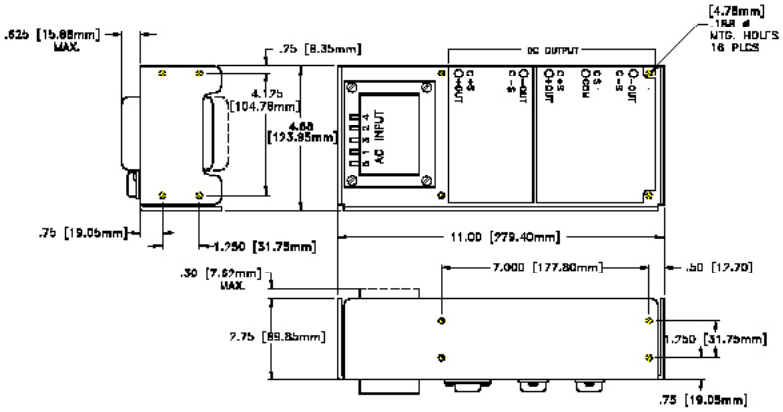

SL Power Electronics, 6050 King Drive, Bldg. A, Ventura, CA 93003, USA. Phone:(805) 486-4565 Fax:(805) 487-8911 www.slpower.com. Rev. 4/710.
Data Sheet © 2010 SL Power Electronics Corp. The information and specifications contained in this data sheet are believed to be correct at time of publication. However, SL Power accepts no responsibility for consequences arising from reproduction errors or inaccuracies. Specifications are subject to change without notice.